Shipping Container Guide

ICE
INTERNATIONAL CARGO EXPRESS

Contents

Most Common Shipping Containers 2
Frequent Questions 4
Container Types And Specifications 13

General Purpose or Dry Shipping Container 14
High Cube Container 15
Open Top Container 17
Flat Rack Container 18
Tunnel Container 19
Side Door Container 20
Refrigerated Container 21
Ventilated Container 22
Insulated Container 23
Half Height Container 24
Tank Container 25
Drums 26
Intermediate Bulk Shift Container 27
Car Carrier Container 28

Road Weight Limits 31

MOST COMMON SHIPPING CONTAINERS

20' General Purpose

These are standard containers of 20' long. They have an external height of 8’6 foot tall or 2.59 meters.

40' High Cube

Another standard container. The primary difference between a General Purpose Container and a High Cube Container is the height of exactly one foot.

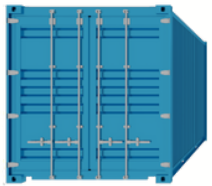

40' General Purpose

This is also a popular standard container with a longer length of 40'. It holds double the freight of a 20' container.

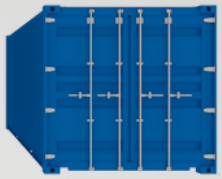

Refeer Container

Refrigerated or reefer containers regulate the temperature to preserve temperature sensitive goods such as produce or seafood.

Flat Rack Container

Flat racks are designed to carry out of gauge cargo. They have sides that can be folded down to accommodate heavy loads, over-sized cargo, construction equipment, building supplies or heavy machinery.

Open Top Container

Primarily used for over-height cargo, Open Top containers have a completely removable, convertible top that allows for access to goods from the top of the container.

FREQUENT QUESTIONS

1. Does my cargo have to be palletised?

While not mandatory, it is always recommended to palletise your cargo to protect it from damage during transit, especially if it is a high value cargo. Your decision to palletise will depend on factors such as the fragility of your cargo, the destination of your cargo, and the mode of transit (FCL, LCL, Air) by which you cargo is being shipped.

Key considerations:

- Pallets themselves take up space in the container which reduces the amount of cargo you can move.
- Palletisation at origin will add to your freight costs because of the additional weight of the pallets.
- Unpalletised cargo takes longer to unload and most truckers won't wait for free until all the cargo is unloaded by hand. You can select a drop off option instead of live unload, but that likely incurs in higher delivery charges as the cartage company needs to come back to pick up the truck the warehouse.
- Some warehouses may not be willing to accept a floor-loaded shipment at all, so you should always check with the warehouse before making a decision.
- Your LCL (less than container load) will be palletised at destination if it was not palletised at origin. Once the shipment has been deconsolidated at the CFS (container freight station), the CFS will palletise the cartons because truckers will not pick up floor-loaded carton.

Bonus Tip:

If you know your shipment will be palletised, enter the pallet count and dimensions when you submit a quote request.

2. How many pallets can I fit in a container?

There are three main types of pallets:

Australia standard pallets (1165 x 1165mm)
Used in storage and warehousing and not suitable for containers.

Standard pallet (1200 x 1000mm)
Used for exports and suitable for loading in standard ISO shipping containers.

EUR pallets (1200 x 800mm)
Most used in European countries, Latin America, United Kingdom, India & New Zealand, these pallets were originally designed for rail transport. The EUR pallet has a number of variants including EUR 1, EUR 2, EUR 3 and EUR 6 being the most common. They can also be used for loading into standard ISO shipping containers.

For Standard pallets:
20' Containers - 10 Standard Pallets
40' Containers - 20 Standard Pallets

For European pallets:
20' Containers - 11 EUR Pallets
40' Containers - 24 EUR Pallets

3. What is the maximum weight of goods I can send in a container?

Tare Weight (or Unladen Weight)
Is the total weight of the empty container. Using this information, the weight of the internal goods can be determined by subtracting it from the container's gross weight.

Payload (or Net Weight)
Is the weight of the cargo or contents that a container can hold. The container max payload should not be exceeded.

Gross Weight
Is the weight of the container plus the maximum payload it can hold.

The weight of the container goods can be determined by subtracting the Tare Weight from the container's Gross Weight. The maximum weights for each container type are described on the 'Container Types' section of this guide.

Key Considerations:

- The exact Payload weight is not known until the container passes over the weighbridge at the entry to the container terminal. An overweight container will be denied access to the container terminal, requiring extra drayage, unloading and re-packing costs and possibly storage and other fees.
- In addition to the container weight there are road transport limits which vary throughout the world and even within the same country. In Australia, incorrect weight declarations can result in large fines and in severe cases criminal prosecution. The exact weight limits for Australian roads can be found **here**.
- In addition to total road weight limit, road transport authorities may also have weight limits for individual axle weight, so that weight is distributed evenly throughout.

4. Are all containers seaworthy?

Not all containers can travel by sea. Seaworthy containers are built and regulated by a set of international standards which determine the sizes and tolerances of the containers. This guarantees that containers fabricated in different factories all work fine. A marking process is used to indicate that a container has been checked and can be used to ship goods/products overseas.

Every ISO Certified Container is manufactured with a CSC Plate. The CSC plate functions as a birth certificate of the container that has details of the manufactured date, the maximum tare weight allowed, maximum stack weight, and most importantly, the date of the last inspection. Regulation dictates that the container has to be inspected after 5 years of its manufactured date and every interval of 30 months after the 5 years.

It is both Shipping Liners and shippers responsibility to make the container equipment seaworthy by regularly servicing its container. To avoid any unforeseen damages for both parties, the shipper should be responsible for checking the CSC plate for it's servicing history to ensure that the liner is diligent and the container is seaworthy.

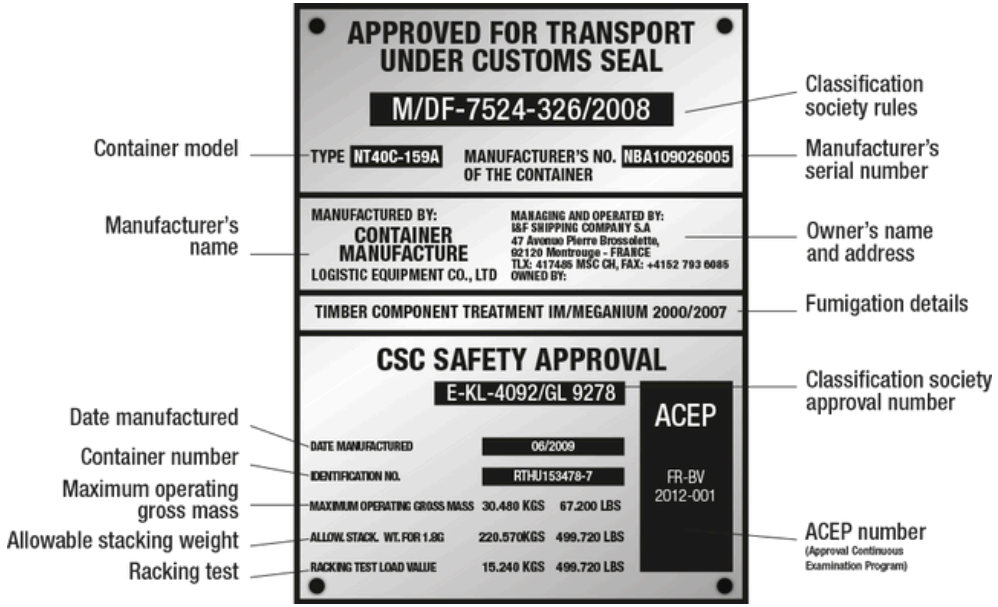

5. What do I do with dunnage after my container arrives?

It is crucial that containers are returned in the exact condition that they are supplied. If you have packing to support your goods during transit you cannot leave this packing in the container. You will get charged for any cleaning /dunnage disposal that needs to occur.

6. Do I have to pay for the container?

The cost of the container for shipping is included within your freight price. Effectively, when booking full containers you pay for the use of container hire for the voyage. Note, you can only access the container a few days before sailing and standard “free time” on arrival is 7 days thereafter. This means you have 7 days to empty your container and return it back to the wharf or you risk getting charged what is called detention.

7. Can I buy a container?

Yes, it is possible to buy a container, however, you must note that containers come in several grades which provide information about how the container was used before it went up for sale. Decide beforehand what grade will suite your needs considering the grades below:

- "**New**" or "**one-trip**" containers have typically been made in China and then shipped for the first time directly to the United States. These containers are weather resistant, and have the least damage.

- "**Cargo-worthy**" containers have been used a bit more, but are still in good condition, and could be used at sea again. Typically these will be wind and water tight, and, structurally speaking, would still be able to handle being shipped overseas.

- "**Wind and water tight**" containers are those that are still able to keep out the elements, but have not been officially inspected in order to be declared “cargo-worthy”.

- "**As is**" containers are those that may or may not be able to stand up to the elements, and may or may not have structural damage.

8. Can I use the container for storage after?

Shipping containers can be used to store anything from furniture to sporting equipment. They are windproof, waterproof, safe and secure while still providing enough room for you to store your items. Because it's not a permanent structure, shipping container storage can also help you circumvent local bylaws helping you avoid penalties and complaints.

Containers are strong and built to last. If left untouched, a new container, could easily sit for 10 to 15 years before needing any maintenance.

Another advantage is the security. Containers can protect your goods from the most tenacious thieves as one would need power tools to break into a container. The 14 gauge steel from which they are constructed are safer than other traditional storages.

9. How Much Space Is In A Standard Container?

It can often be difficult to imagine just how much space there is inside a container. The following graphics help illustrate what usable space is available when loading a 'standard' size sedan into a 20ft container.

Very minimal space, around 30cm depending on the vehicle width.

Usable space for extra cargo.

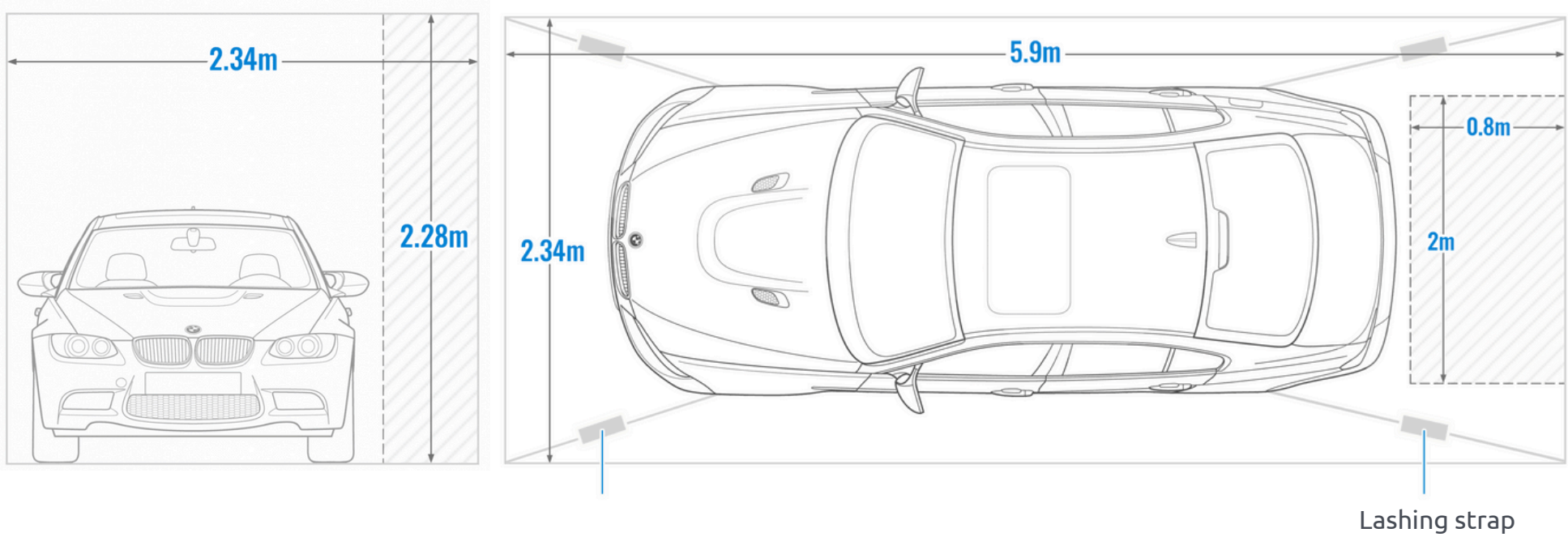

CONTAINER TYPES AND SPECIFICATIONS

General Purpose or Dry Shipping Container

20 foot

40 foot

Standard shipping containers (also known as dry shipping containers or general purpose containers) are the most common containers available in the market. These containers are available in different sizes such as 20 foot, 40 foot and 40 foot high cube.

High Cube Container (HC)

High Cube

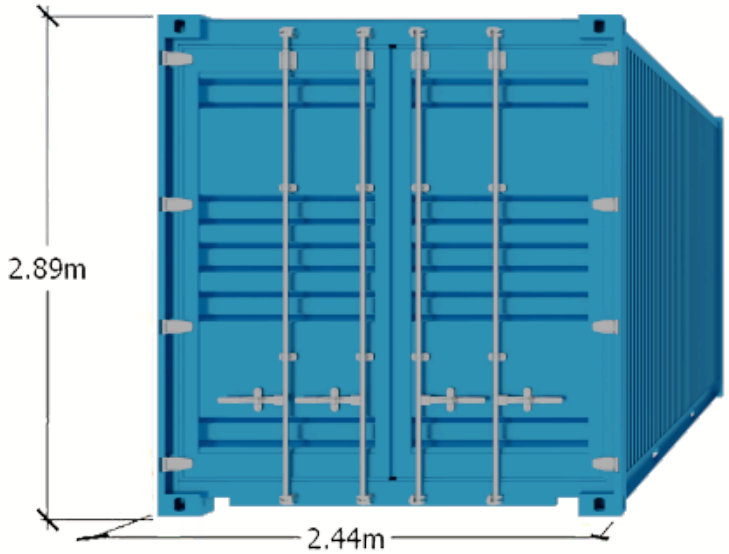

General Purpose

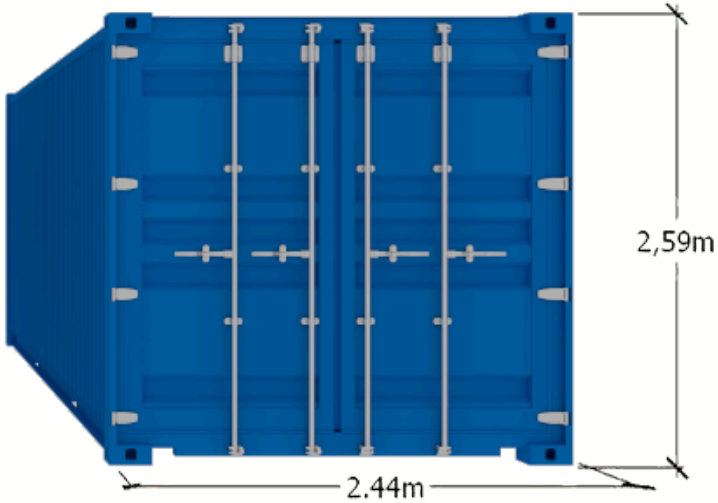

High cube shipping containers are similar in structure to general purpose containers, but taller by about 1 foot.

These containers are used in cases where a slightly bigger volume capacity is required. Most high cube containers have a recess in the floor at the front end to centre the container on so-called gooseneck chassis, which allows it to lie lower and be of taller construction.

Standard Container Dimensions

		20' CONTAINER	40' CONTAINER	40' HIGH CUBE
External	Length	6.06m | 20ft	12.2m | 40ft	12.2m | 40ft
	Height	2.60m | 8ft 6in	2.60m | 8ft 6in	2.90m | 9ft 6in
	Width	2.44m | 8ft	2.44m | 8ft	2.44m | 8ft
Internal	Length	5.9m | 19ft 4in	12.03m | 39ft 5in	12.03m | 39ft 5in
	Height	2.39m | 7ft 10in	2.39m | 7ft 10in	2.69m | 8ft 10in
	Width	2.35m | 7ft 9in	2.35m | 7ft 9in	2.35m | 7ft 9in
Door	Height	2.28m | 7ft 6in	2.28m | 7ft 6in	2.58m | 8ft 6in
	Width	2.34m | 7ft 9in	2.34m | 7ft 9in	2.34m | 7ft 8in
Capacity	Cubic Capacity	33.2 m^3 | 1,172 ft^3	67.6 m^3 | 2,387 ft^3	76.4 m^3 | 2,698 ft^3
	Max Gross Weight	30,480kg | 67,196lbs	30,480kg | 67,196lbs	30,480kg | 67,196lbs
	Tare Weight	2,000kg | 4,409lbs	3,470kg | 7,650lbs	3,660kg | 8,068lbs

Container dimensions are standardized by ISO for guidance only. Slight variations between manufacturers' specifications may occur.

Open Top Container

		20' CONTAINER	40' CONTAINER
External	Length	6.06m | 20ft	12.2m | 40ft
	Height	2.59m | 8ft 6in	2.59m | 8ft 6in
	Width	2.43m | 8ft	2.43m | 8ft
Internal	Length	5.96m | 19ft 4in	12.04m | 39ft 5in
	Height	2.38m | 7ft 8in	2.38m | 7ft 8in
	Width	2.35m | 7ft 8in	2.35m | 7ft 8in
Door	Height	2.28m | 7.4ft	2.29m | 7.5ft
	Width	2.34m | 7.7ft	2.34m | 7.7ft
Roof	Opening Heigth	5.44m | 17.8ft	11.57m | 38ft
	Opening Width	2.23m | 7.3ft	2.21m | 7.3ft
Capacity	Cubic Capacity	32.5 m^3 | 1,147 ft^3	62.4 m^3 | 2,343 ft^3
	Max Gross Weight	21,832 kg | 67,196lbs	28,280 kg | 67,196lbs
	Tare Weight	2,350kg | 5,181lbs	3,850kg | 8,489lbs

An open top shipping container has a convertible top that can be completely removed. This is suitable for cargo that is over-height and cannot be easily loaded through the door, such as tall machinery or other heavy / bulky finished products whose handling and loading can only be performed with a crane or rolling bridge. Open top containers have lashing rings installed to the upper and lower side rails and corner posts to secure cargo.

Flat Rack Container

		20' CONTAINER	40' CONTAINER
External	Length	6m | 20 ft	12.1m | 40ft
	Height	2.6m | 8ft 6in	2.59m | 8ft 6in
	Width	2,4m | 8ft	2.43m | 8ft
Internal	Length	5.94 m | 19.5 ft	12.13 m | 39.8 ft
	Height	2.35 m | 7.7 ft	2.14 m | 7 ft
	Width	2.35 m | 7.7 ft	2.40 m | 7.9 ft
Door	Height	2.28m | 7ft 8in	2.28m | 7ft 8in
	Width	2.34m | 7ft 8in	2.34m | 7ft 8in
Capacity	Cubic Capacity	32.7 m³ | 1,154.3 ft³	62.2 m³ | 2,195 ft³
	Max Gross Weight	45,000Kg | 99,200lbs	55,000Kg | 121,250lbs
	Tare Weight	2,360kg | 5,203.8lbs	5,000kg | 11,025lbs

This shipping container is used for over-dimensional (out of gauge) cargo. This storage container has collapsible sides that can be folded to make a flat rack. The end walls are stable enough to allow cargo securing, which is ideal for shipping goods such as heavy machinery, vehicles on tracks, big reels and construction materials. Some 40' flat rack shipping containers are suitable to carry as much as 45 metric tons of cargo.

Tunnel Container

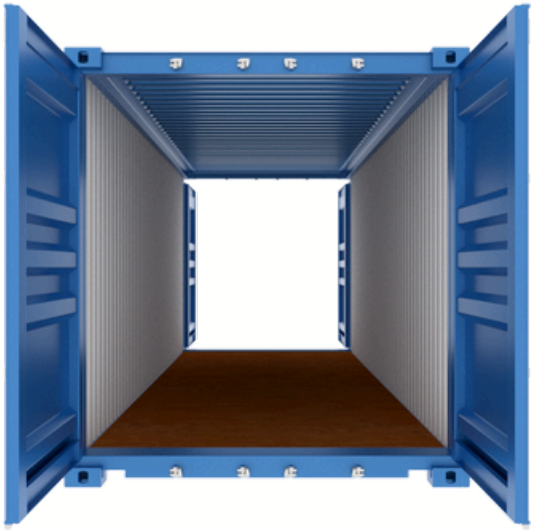

		20' CONTAINER	40' CONTAINER
External	Length	6m | 20 ft	12.1m | 40ft
	Height	2.5m | 8.5 ft	2.5m | 8.5ft
	Width	2.4m | 8 ft	2.4m | 8 ft
Internal	Length	5.9m | 19.4 ft	12m | 39.5ft
	Height	2.3m | 7.7 ft	2.3m | 7.7ft
	Width	2.3m | 7.7 ft	2.3m | 7.7 ft
Door	Height	2.28m | 7.4ft	2.28m | 7.4ft
	Width	2.33m | 7.6ft	2.34m | 7.6ft
Capacity	Cubic Capacity	32.8m³ | 1,158 ft³	67.4 m³ | 2,380 ft³
	Max Gross Weight	30,480kg | 67,196.8lbs	32,500Kg | 71,650lbs
	Tare Weight	2,800kg | 6,172lbs	3,800Kg | 8,377.5lbs

Double Door or Tunnel shipping container are designed with double doors on each end, making it easy to manage and maintain stock levels and eliminating issues of accessing items towards the back of the container. This container can also act as a tunnel or walkway through which to direct customer footfall - perfect for outdoor events. Manufactured to both 20ft and 40ft lengths, they're suitable for businesses who wish to store their stock for longer periods of time.

Open Door/Side Door Container

		20' CONTAINER	40' CONTAINER
External	Length	6m | 20 ft	12.1m | 40ft
	Height	2.5m | 8.5 ft	2.5m | 8.5ft
	Width	2.4m | 8 ft	2.4m | 8 ft
Internal	Length	5.9m | 19.4 ft	12m | 39.5ft
	Height	2.3m | 7.7 ft	2.3m | 7.7ft
	Width	2.3m | 7.7 ft	2.3m | 7.7 ft
Door	Height	2.28m | 7.4ft	2.28m | 7.4ft
	Width	2.33m | 7.6ft	2.34m | 7.6ft
Capacity	Cubic Capacity	32.8 m^3 | 1,158 ft^3	67.4 m^3 | 2,380 ft^3
	Max Gross Weight	30,480kg | 67,196.8lbs	32,500Kg | 71,650lbs
	Tare Weight	2,800kg | 6,172lbs	3,800Kg | 8,377.5lbs

Side Door containers are very similar to regular, general purpose shipping containers, the only difference being that the doors can open completely on the side too. This feature provides much wider room and access, which makes loading and unloading materials easy. Open side shipping containers generally come in 20' and 40', and they provide adequate room for extra large items that can't fit through the regular doors.

Refrigerated Container

		20' CONTAINER	40' CONTAINER
External	Length	6m | 20 ft	12.1 m | 40 ft
	Height	2.6m | 8.5ft	2.5m | 8.5ft
	Width	2.4m | 8ft	2.4m | 8ft
Internal	Length	5.44 m | 17.9ft	11.56m | 37.9ft
	Height	2.27 m | 7.5ft	2.25m | 7.4ft
	Width	2.29 m | 7.5ft	2.28m | 7.5ft
Door	Height	2.10m | 6.9ft	2.26m | 7.4ft
	Width	2.23m | 7.3ft	2.29m | 7.5ft
Capacity	Cubic Capacity	28.3 m³ | 999 ft³	59.3 m³ | 2,093.3 ft³
	Max Gross Weight	30,480kg | 67,200lb	32,500kg | 71,650lb
	Tare Weight	3,080kg | 6,791.4 lbs	4,800kg | 10,584lbs

Reefer containers or refrigerated containers are used to transport goods requiring temperature-controlled conditions in transit, such as fruit, vegetables, dairy products and meat. They are fitted with a refrigeration unit which is connected to the carrying ship's electrical power supply or or the port's power supply. Alternatively, they can be fitted with 'power packs' which use diesel generators to power the cooling system. They are available as 20' and 40' containers and are able to maintain internal temperatures between +25 and -25 degrees centigrade.

Ventilated Container

		20' CONTAINER	40' CONTAINER
External	Length	6.10m | 19.1ft	12.1m | 40ft
	Height	2.59m | 8.6ft	2.5m | 8.5ft
	Width	2.44m | 8ft	2.4m | 8 ft
Internal	Length	6m | 19.4ft	12m | 39.5ft
	Height	2.6m | 7.7ft	2.3m | 7.7ft
	Width	2.3m | 7.7ft	2.3m | 7.7 ft
Door	Height	2.2m | 7.6ft	2.28m | 7.5ft
	Width	2.3m | 7.8ft	2.34m | 7.8ft
Capacity	Cubic Capacity	32 m³ | 1,167 ft³	67.6 m³ | 2,380 ft³
	Max Gross Weight	32,500kg | 52,897lbs	30,480kg | 67,196.8lbs
	Tare Weight	2,394kg | 5,297lbs	3,720kg | 8,201.1lbs

This shipping container offers a ventilation system due to its lateral openings that permit air flow and circulation, suitable for the transportation of goods that require constant temperature and conditions. Thanks to its ventilation system, this container is able to expel hot air and allow fresh air to enter, thus preventing condensation and humidity changes that may damage the cargo. One of the main products transported in the ventilated container is coffee, which is why it may also sometimes also be known as the “coffee container”. The common size for ventilated containers is 20′.

Insulated Container

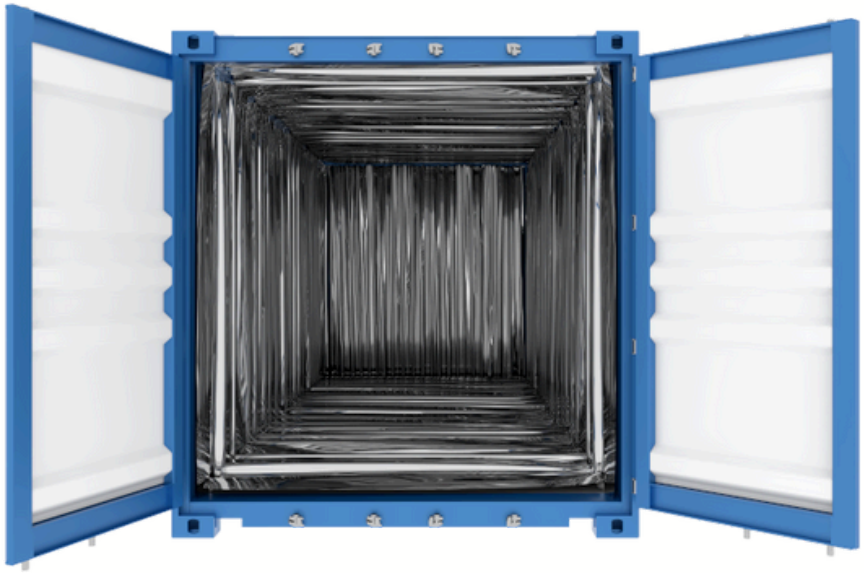

		20' CONTAINER	40' CONTAINER
External	Length	6m | 20ft	12.1m | 40ft
	Height	2.5m | 8.5ft	2.8m | 9.5ft
	Width	2.4m | 8ft	2.4m | 8 ft
Internal	Length	5.4m | 17.8ft	11.4m | 37.7ft
	Height	2.3m | 7.7ft	2.5m | 8.5ft
	Width	2.2m | 7.5 ft	2.2m | 7.5 ft
Door	Height	2m | 6.1ft	2.20m | 7.3ft
	Width	2.2m | 7.5ft	2.28m | 7.5ft
Capacity	Cubic Capacity	28.3 m^3 | 970 ft^3	57.8 m^3 | 2,090 ft^3
	Max Gross Weight	24,000 kg | 52,910 lbs	32,500Kg | 71650lbs
	Tare Weight	2,650kg | 5,840lbs	4,800 kgs | 10,580lbs

Unlike refrigerated containers, which have a power source and controlled temperature range, insulated containers rely on their insulation properties to maintain a steady temperature throughout. This is an advantage if your goods are being shipped a relatively short distance, when no power is available, or when a regular temperature is all that's required rather than refrigeration. For instance, pre-cooled cargo from cold storage can be shipped in an insulated shipping container to maintain a cold chain very successfully on short trips. Insulated shipping containers are also used for storage and accommodation.

Half Height Container

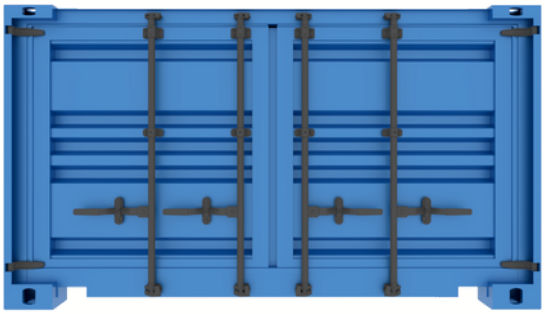

		20' CONTAINER
External	Length	6m | 20ft
	Height	1.4m | 5ft
	Width	2.4m | 8ft
Internal	Length	5.8m | 19ft
	Height	1m | 3ft
	Width	2.1m | 7ft
Door	Height	0.8m | 2.6ft
	Width	2.3m | 7.5ft
Capacity	Cubic Capacity	20.7 m³ | 395 ft³
	Max Gross Weight	13,800kg | 30,424lbs
	Tare Weight	3,720kg | 8,201lbs

Half-height shipping containers are designed for transporting bulk cargo that is heavy and dense, such as coal, stones concentrates, sand, ore and other mined materials. Half height containers have a low centre of gravity so they can better handle heavier loads than taller containers. They are also easy for loading and unloading. Half-height containers are supplied with waterproof removable hard lids which eliminate dust during transit. They can be custom built to specific requirements, in a range of various heights and discharge systems. They come in 20' and 40' sizes, 20' being the most common.

Tank Container

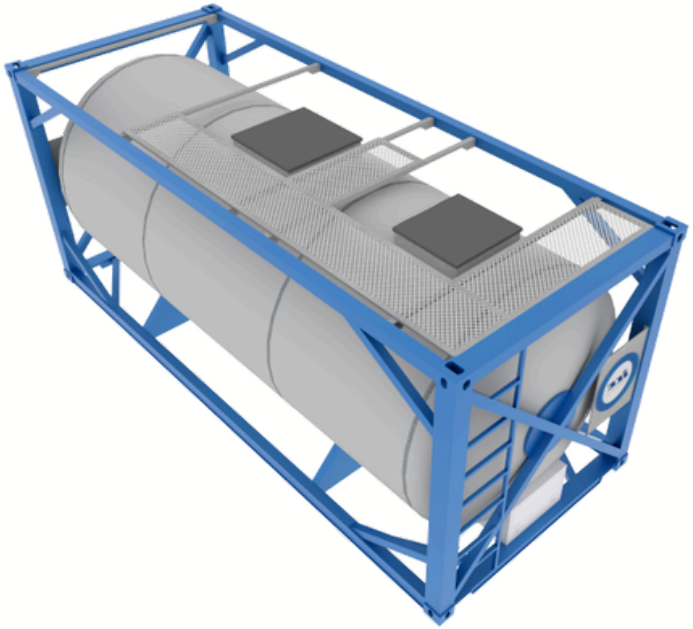

20'
CONTAINER

External	Length	6m | 20ft
	Height	2.5m | 8.6ft
	Width	2.4m | 8ft
Capacity	Load Capacity	26,000L | 6,450 Gal
	Max Gross Weight	36,000kg | 71,099lbs
	Tare Weight	3,600kg | 8,267lbs

Also known as ISO containers, tank containers are specially designed to transport liquids or gases. They can hold bulk cargoes ranging from perishable liquids such as oil or wine to hazardous substances. Once a tank has been tagged to ship hazardous substances, it can no longer be used to ship food, and vice versa. The ISO tank is supported on a structure that can be adjusted according to its dimensions. It’s also lined with an insulating material that protects it from the cargo it’s transporting. The most commonly used tanks measure 20' or 40' but there are also 10' and 30' tanks.

Drums

200
LITRE

External	Diameter (rim) Diameter (chines) Height	5.8m | 23in 5.9m | 23.5in 8.7m | 34.5in
Internal	Diameter Height	0.5m | 22.5in 0.8m | 33.5in
Capacity	Volume	200L | 13,320 in³

These are drum shaped shipping containers and can be made from different types of materials like Iron, steel, aluminum or other light weight metals such as fiber or hard plastic. They are suitable for transport of liquid materials in bulk. Drums are often certified for shipment of dangerous goods. They can be used for sea shipment or road transport. Although they are smaller in size, they may need extra space due to their shape. It is common to hear a drum referred to as a barrel and the two terms are used nearly interchangeably.

Intermediate Bulk Shift Containers (IBC)

An intermediate bulk container (also known as IBC tote, IBC tank, IBC or pallet tanks) is a reusable industrial container designed for the transport and storage of bulk liquid and granulated substances, such as liquids, chemicals, food ingredients, solvents, pharmaceuticals, etc. There is a tap or valve at the base where a hose can be attached to allow easy transfer of contents into smaller containers. for easy packaging, distribution, and sale. They also usually have metal cage housing for extra security. The term 'intermediate' comes from the volume that intermediate bulk containers carry, which sits in between that of tanks and drums. The two most common volumes of the IBC are 275 gallons and 330 gallons or 1,040 litres and 1,250 litres (the 1040 liter IBCs are often listed as being 1000 litres).

Car Carriers

Car carrier containers are used to move cars by road and rail but sometimes also used to ship by sea. Generally, RORO (Roll On Roll Off) shipping arrangements are used to move cars and other automobiles by sea. During RORO shipping, vehicles are directly driven on to RORO vessel. Compared to shipment of automobiles with car carrier containers, the cost of transportation is less in RORO shipping. However, car carrier containers can be shipped anywhere in the world, whereas RORO vessels have their limitations as to the global routes that accept this type of transport.
Usually, up to four cars can be loaded in a 40ft high cube container.

MAXIMUM WEIGHT ALLOWED IN SHIPPING CONTAINERS IN AUSTRALIA

Weight Limits

The **Australian Heavy Vehicle National Law (HVNL)** sets out the obligations for operators, drivers, consignors and consignees about the requirements for container weight declarations (CWD).

NSW	VIC	QLD	SA	WA
Maximum weight for road transport in New South Wales is **28T.**	Maximum weight for road transport in Victoria is **28T.**	Maximum weight for road transport in Queensland is **28T.**	Maximum weight for road transport in South Australia is **27T.**	Maximum weight for road transport in Western Australia is **28T.**

Height & Width Limits

- **Maximum height is 4.3 metres** from the ground to the highest point (this includes the height of the trailer which is generally 0.7 metres). A maximum of 4.6 metres high applies on approved roads.
- **Maximum width is 2.5 metres.** Without a special permit, 6 inches on either side of the trailer is allowed to be transported. Applications for special permits for loads exceeding these limits are generally made through the RTA (Road Traffic Authority).

**Please note that the above weights are a general guide only. There may be capacity to go higher depending on truck setups, permits, mass management and other factors. At all times, the loads must be made secure and be distributed evenly across the container.*

FINAL NOTE

This guide is for educational purposes only and provides an overview of many different types of containers used across the world.
Not all container types will be available into or out of Australia and you should directly with ICE regarding your specific consignment.
For more information, get in touch via marketing@icecargo.com.au

ICE®
INTERNATIONAL
CARGO EXPRESS

Consult. Plan. Deliver.

www.icecargo.com.au

1300 227 461